Cambridge Assessment International Education

Cambridge IGCSE™

CANDIDATE NAME	

CENTRE NUMBER						CANDIDATE NUMBER				

5123886156

DESIGN & TECHNOLOGY **0445/42**

Paper 4 Systems & Control **May/June 2021**

1 hour

You must answer on the question paper.

No additional materials are needed.

INSTRUCTIONS

- Section A: answer **all** questions.
- Section B: answer **one** question.
- Use a black or dark blue pen. You may use an HB pencil for any diagrams or graphs.
- Write your name, centre number and candidate number in the boxes at the top of the page.
- Answer in the space provided.
- Do **not** use an erasable pen or correction fluid.
- Do **not** write on any bar codes.
- You may use a calculator.

INFORMATION

- The total mark for this paper is 50.
- The number of marks for each question or part question is shown in brackets [ ].
- All dimensions are in millimetres.

This document has **20** pages. Any blank pages are indicated.

DC (RW/SW) 205941/1
© UCLES 2021

Section A

Answer **all** questions in this section.

1 Identify **two** renewable energy sources from the list below.

oil **solar** **natural gas** **nuclear** **hydroelectric**

1 .....

2 .....
[2]

2 **(a)** Give **one** example of a manufacturing machine that can be controlled by computer.

..... [1]

(b) Describe **two** benefits of using computer controlled machines.

.....

.....

.....

..... [2]

3 Fig. 3.1 shows block diagrams of two types of control system.

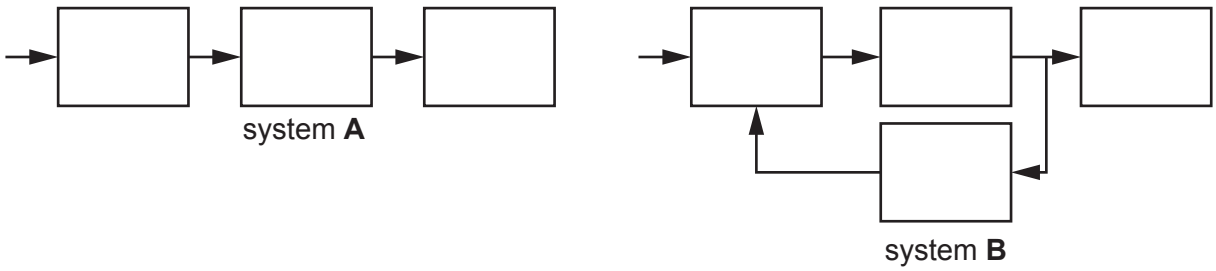

Fig. 3.1

Use examples to explain the differences between the two types of control system.

.....

.....

.....

.....

..... [3]

4 Fig. 4.1 shows a door handle and latch.

Fig. 4.1

(a) State the conversion of motion that takes place between the door handle and latch.

..... to ..... [2]

(b) Give **one** example of a mechanism that gives a different conversion of motion.

Name of mechanism .....

Conversion of motion

..... to ..... [2]

5 Fig. 5.1 shows a series of spur gears in a machine.

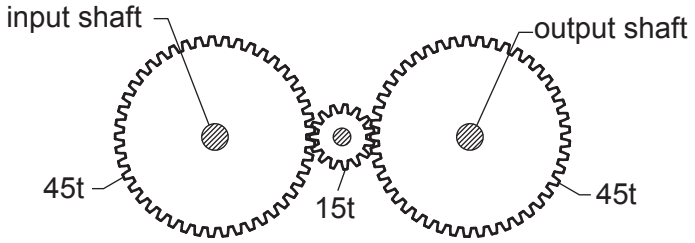

Fig. 5.1

(a) Give **two** reasons for using the spur gears in this arrangement.

1 .....

2 .....
[2]

(b) Describe the result of using a 15t spur gear on an input shaft and using a 45t spur gear on an output shaft.

.....

.....

.....

..... [2]

6 Fig. 6.1 shows a safety symbol for an item of personal protective equipment (PPE).

Fig. 6.1

State the meaning of the safety symbol.

.....

..... [1]

7 Give **one** reason why lubrication is important in mechanisms.

.....

..... [1]

8 Complete the following statements about units used in electronics.

Capacitance is measured in .....

Resistance is measured in .....

Current is measured in .....
[3]

9 The list below shows abbreviations for multiple and sub-multiple units of voltage.

kV **mV** **MV** **μV** **V**

List the units in order of size with the smallest unit on the left.

smallest						**largest**

[4]

Section B

Answer **one** question from this section.

10 **(a)** Fig. 10.1 shows a building under construction.

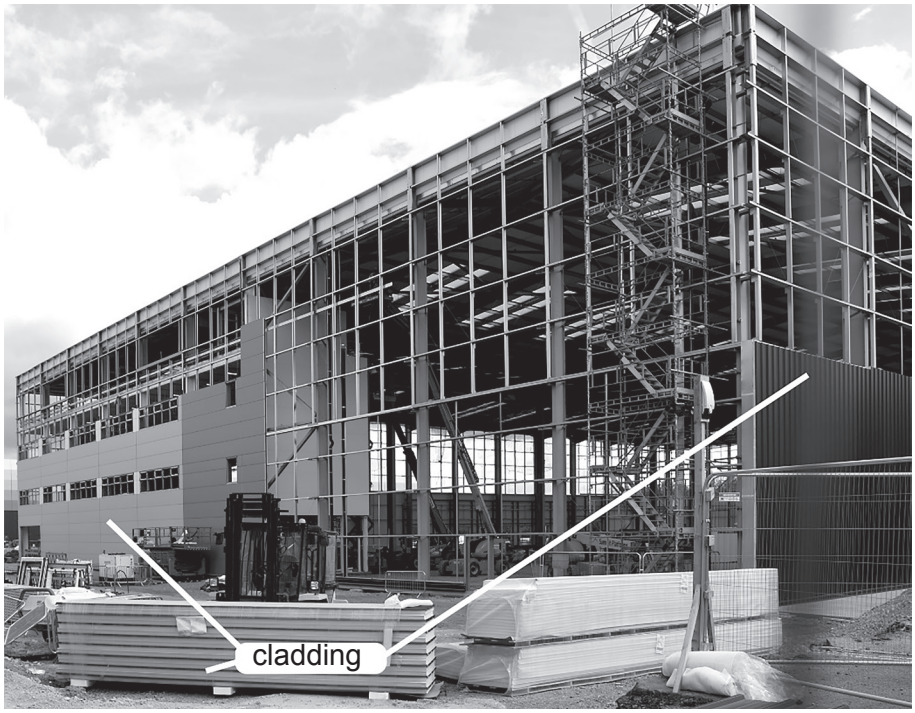

Fig. 10.1

(i) State the type of structure that is being used for the building.

..... [1]

(ii) Describe the purpose of the cladding material.

.....

.....

..... [2]

(iii) State **two** stationary loads and **two** moving loads that the finished building will have to withstand.

Stationary Loads

1 .....

2 .....

Moving Loads

1 .....

2 .....

[4]

(b) Fig. 10.2 shows part of a structure made from steel box section material 50 × 50.

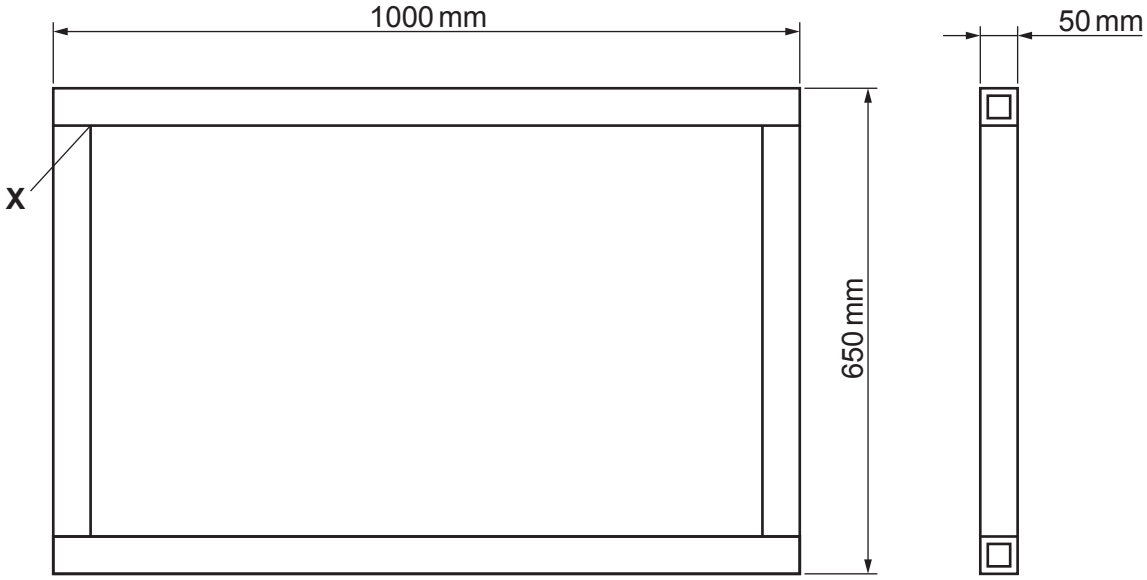

Fig. 10.2

Draw on Fig. 10.2 to show how corner **X** could be strengthened using a gusset.
Add notes to indicate how the gusset would be joined to the structure. [2]

(c) **(i)** Fig. 10.3 shows a cabinet made from four pieces of wood that are joined together.
Use notes and sketches to show **one** suitable joint on the enlarged view of corner **A**.

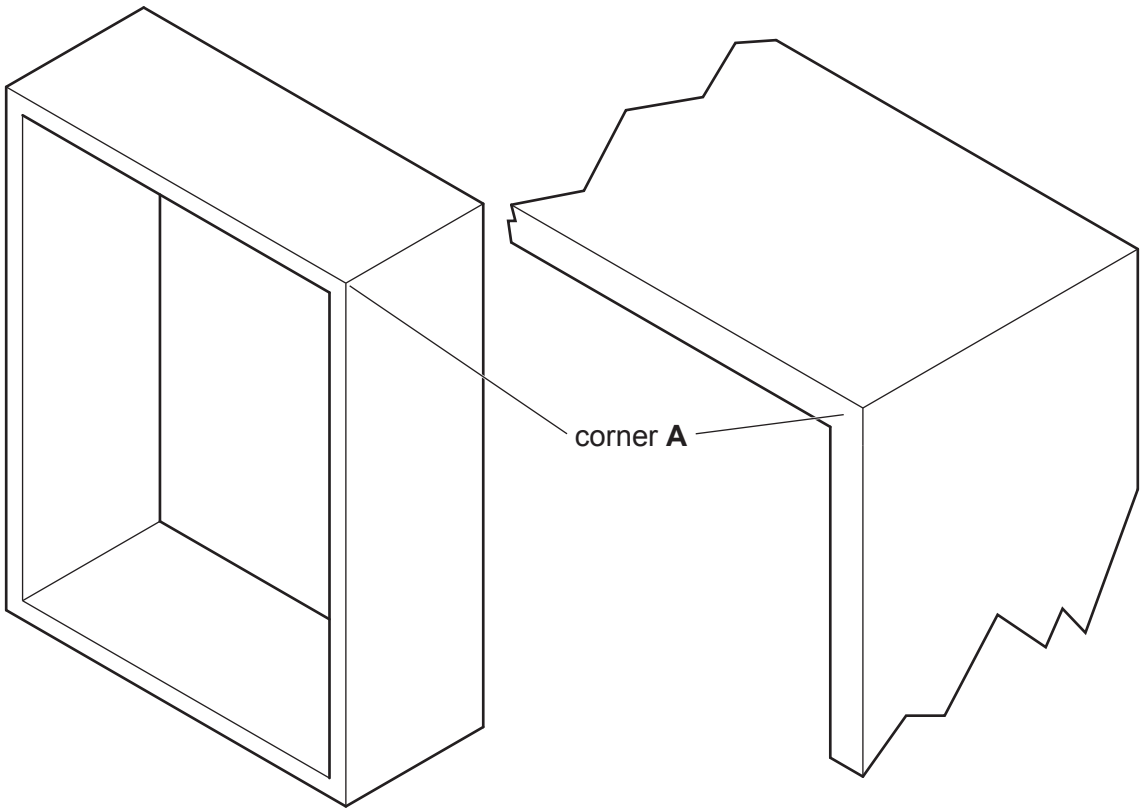

Fig. 10.3 [3]

(ii) Name **two** natural defects that can occur in wood.

1 .....

2 .....
[2]

(d) Fig. 10.4 shows the jib of a crane with an enlarged view of the base.
The crane is in equilibrium.

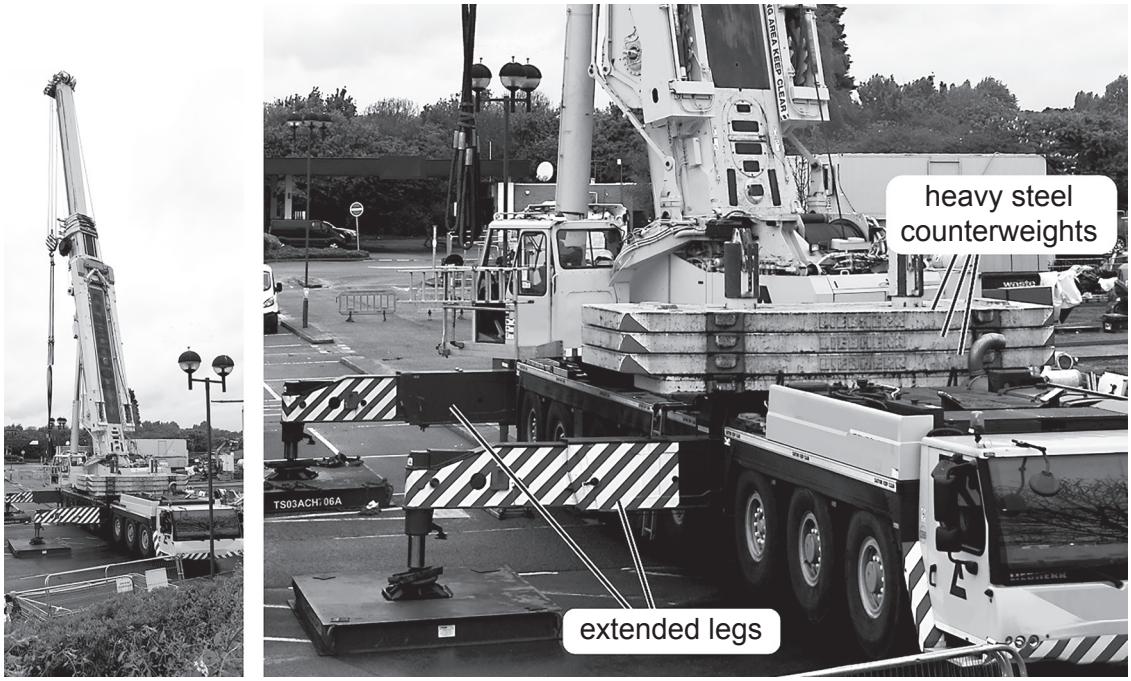

Fig. 10.4

(i) State what is meant by equilibrium.

.....

..... [1]

(ii) Describe how the crane is kept in equilibrium when a load is being lifted.

.....

.....

.....

.....

..... [3]

(iii) Components of the crane will be affected by compression, tension and torsion.
Give **one** example of where each of these forces occurs when the crane is operating.

Compression .....

Tension .....

Torsion .....
[3]

(e) Fig. 10.5 shows a beam with two loads applied to it.

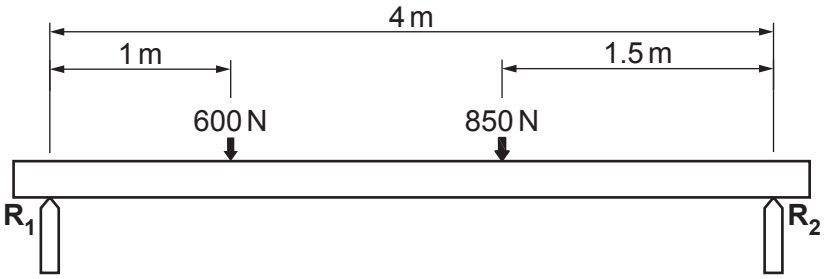

Fig. 10.5

Calculate the reaction at $\mathbf{R_1}$ and $\mathbf{R_2}$.

.....

.....

.....

.....

.....

..... [4]

11 **(a)** Fig. 11.1 shows a belt and pulley system.

Fig. 11.1

(i) Give **two** changes in movement of the output pulley compared to movement of the input pulley.

1 .....

2 .....
[2]

(ii) Fig. 11.2 shows three spur gears.

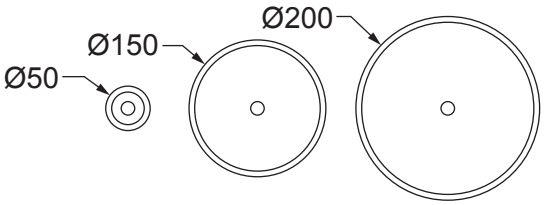

Fig. 11.2

Draw the outline of two of the spur gears arranged to give the same change to the output as the belt and pulley system in Fig. 11.1.
Label the input and output.

[3]

(iii) Give **two** benefits and **two** drawbacks that spur gears have when compared to a belt and pulley system.

Benefits

1 .....

.....

2 .....

.....

Drawbacks

1 .....

.....

2 .....

.....
[4]

(iv) Fig. 11.3 shows a compound gear arrangement from input gear **A** to output gear **D**.

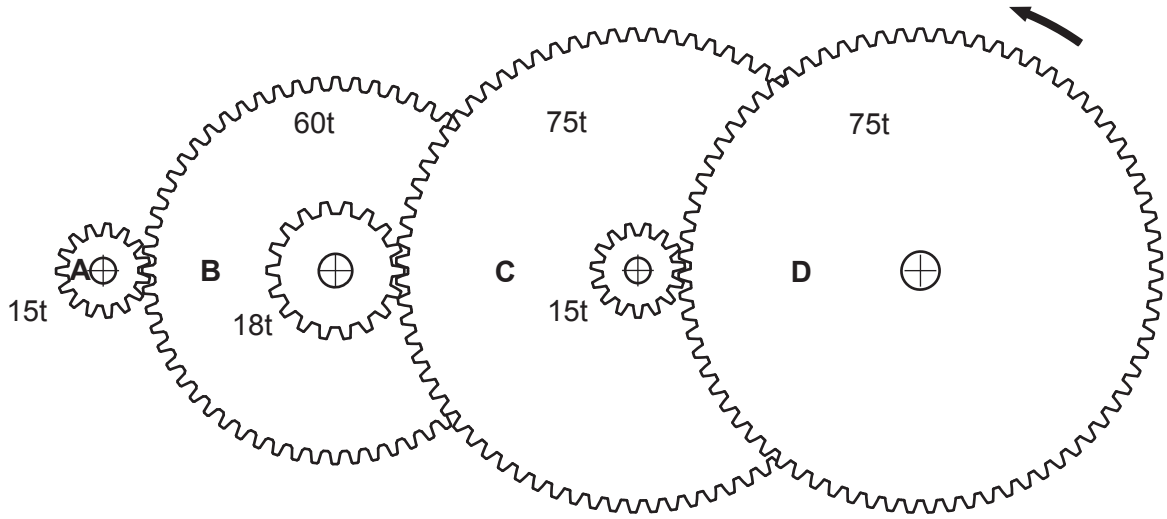

Fig. 11.3

Calculate the velocity ratio of the system.

.....

.....

.....

..... [4]

(v) Indicate on Fig. 11.3 the direction of rotation of input gear **A**. [1]

(b) Fig. 11.4 shows a steam locomotive with an enlarged view of the driving wheels.

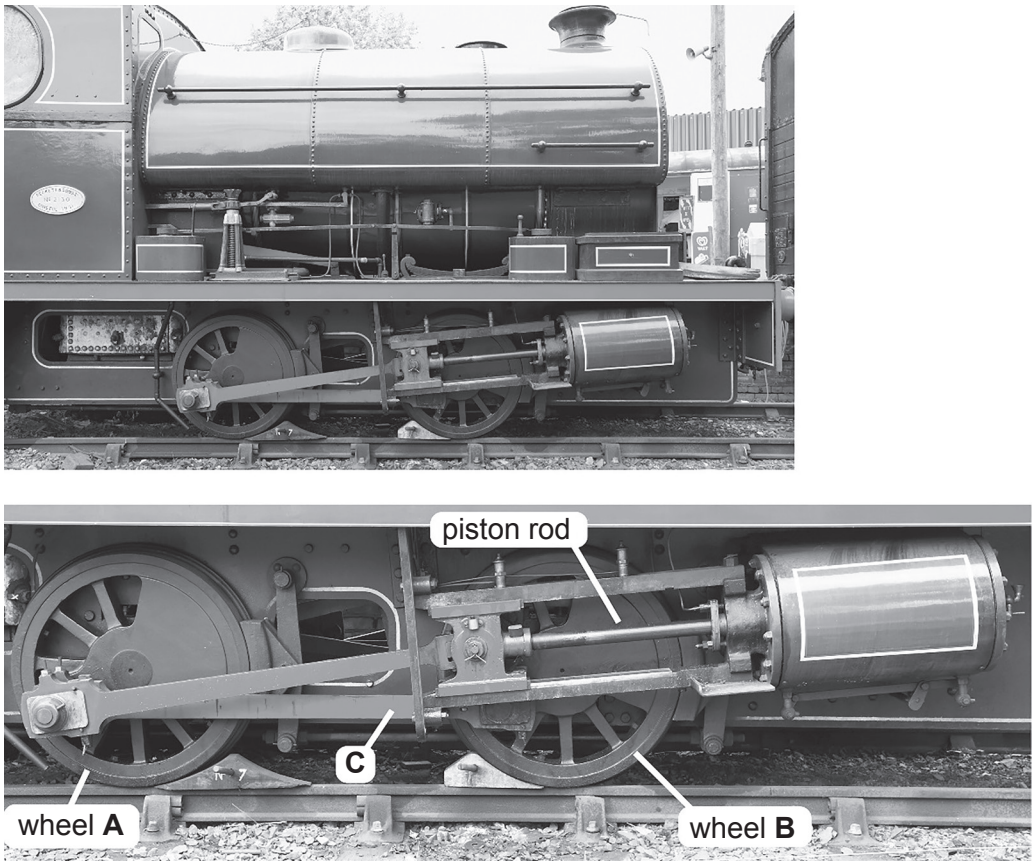

Fig. 11.4

Use words from the list below to complete the sentences describing the drive system. Each word may be used once, more than once or not at all.

linear **linkage** **reciprocating** **slider**

oscillating **crank** **rotary** **rack**

The piston rod connects to wheel **A** through a ..... and .....

mechanism.

The ..... motion of the piston rod is converted to .....

motion at wheel **A**. Part **C** is a ..... that connects wheel **A** to wheel **B**.

[5]

(c) Fig. 11.5 shows a shaft in a machine supported by plain bearings.

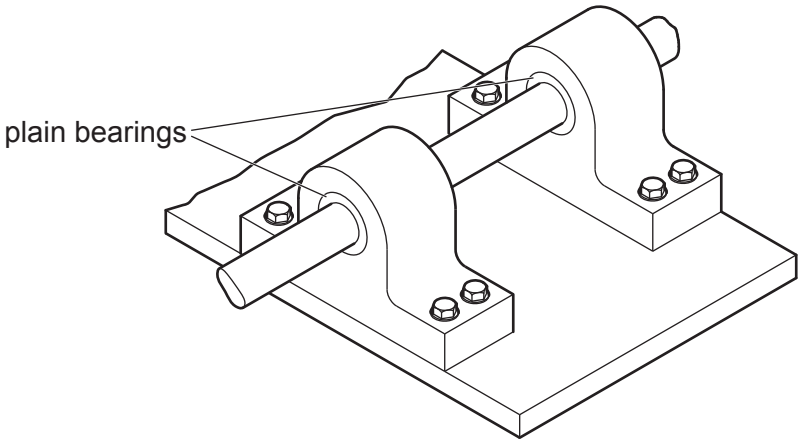

Fig. 11.5

(i) Explain why bearings are needed to support a shaft in a machine.

.....

.....

..... [2]

(ii) Give **two** features of a plain bearing.

1 .....

.....

2 .....

.....
[2]

(iii) Name **two** other types of bearing that could be used to support a shaft.

1 .....

2 .....
[2]

12 **(a)** The list below shows different stages in the production of an electronic circuit.

(i) Place each stage in order.
The last one has been done for you.

solder components **design PCB** **fit components to PCB**

design circuit **drill holes in PCB** **make PCB**

Stage 1 .....

Stage 2 .....

Stage 3 .....

Stage 4 .....

Stage 5 .....

Stage 6 ....Solder components..... [4]

(ii) Fig. 12.1 shows two examples, **A** and **B**, of faulty soldering on a circuit board.

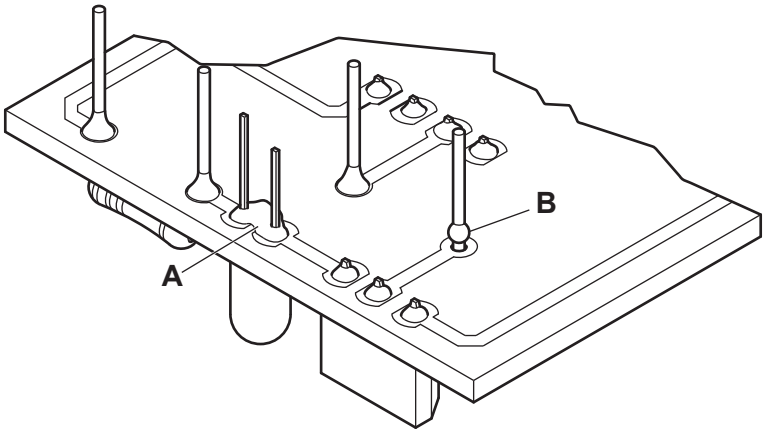

Fig. 12.1

Describe how the faults can be corrected.

A .....

.....

.....

B .....

.....

.....

[4]

(b) Fig. 12.2 shows a potential divider circuit.

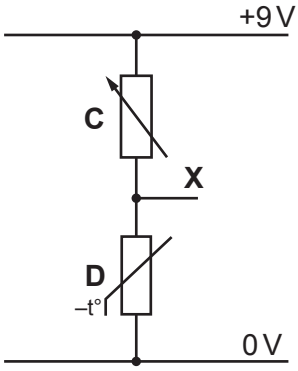

Fig. 12.2

(i) State the name of components **C** and **D**.

C .....

D .....
[2]

(ii) Calculate the voltage at point **X** when the resistance of **C** is 95 kΩ and the resistance of **D** is 3 kΩ.

Use the formula: $V_{out} = \frac{R_2}{(R_1 + R_2)} \times V_{in}$

.....

.....

.....

..... [3]

(iii) Describe what will happen if component **D** is cooled.

.....

.....

..... [2]

(iv) Point **X** is connected to a transistor as shown in Fig. 12.3.

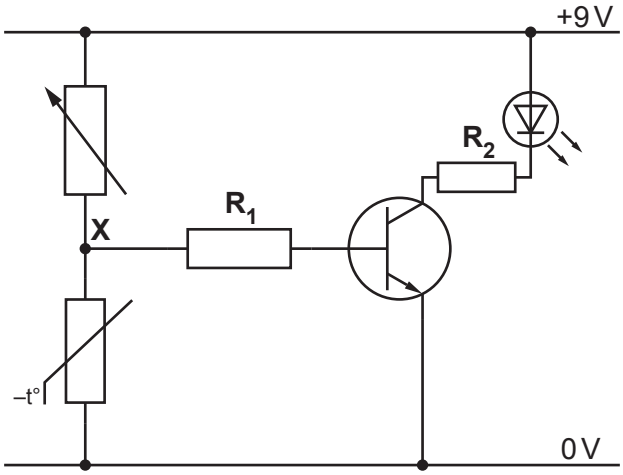

Fig. 12.3

State the purpose of resistors $\mathbf{R_1}$ and $\mathbf{R_2}$.

..... [1]

(v) Name the type of transistor used in the circuit.

..... [1]

(c) Fig. 12.4 shows two logic circuits made from switches.

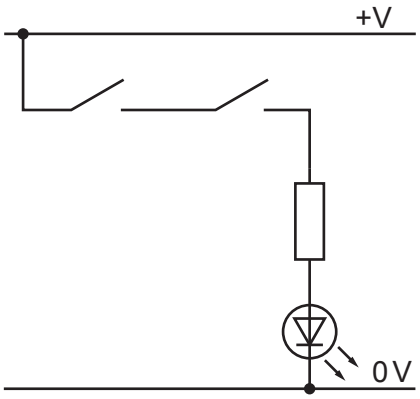

circuit 1

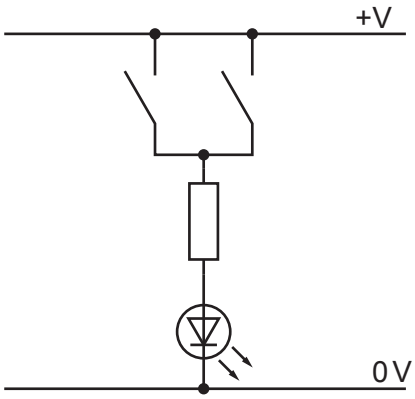

circuit 2

Fig. 12.4

(i) State the type of logic used in each circuit.

Circuit 1 .....

Circuit 2 .....
[2]

(ii) Give **two** reasons why it may be better to use a logic IC rather than individual components.

1 .....

2 .....
[2]

(iii) Fig. 12.5 shows a logic system and truth table.

Complete the truth table.

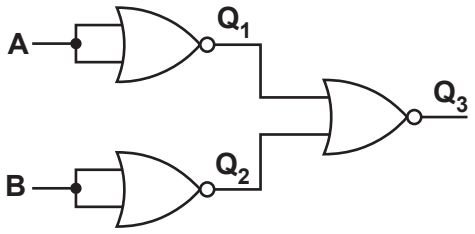

A	B	Q_1	Q_2	Q_3
0	0			
0	1			
1	0			
1	1			

Fig. 12.5 [3]

(iv) From the list below, circle the individual logic gate that will provide the same function as the logic system shown in Fig. 12.5.

AND **OR** **NAND** **NOR** **NOT** [1]

BLANK PAGE

BLANK PAGE

BLANK PAGE

Permission to reproduce items where third-party owned material protected by copyright is included has been sought and cleared where possible. Every reasonable effort has been made by the publisher (UCLES) to trace copyright holders, but if any items requiring clearance have unwittingly been included, the publisher will be pleased to make amends at the earliest possible opportunity.

To avoid the issue of disclosure of answer-related information to candidates, all copyright acknowledgements are reproduced online in the Cambridge Assessment International Education Copyright Acknowledgements Booklet. This is produced for each series of examinations and is freely available to download at www.cambridgeinternational.org after the live examination series.

Cambridge Assessment International Education is part of the Cambridge Assessment Group. Cambridge Assessment is the brand name of the University of Cambridge Local Examinations Syndicate (UCLES), which itself is a department of the University of Cambridge.

© UCLES 2021